data sheet: C2R20S

Kroeplin GmbH
Gartenstraße 50
D-36381 Schlüchtern

Tel.: 06661 86 0
Fax: 06661 86 39
Mail: sales@kroeplin.com
Web: www.kroeplin.com

Kroeplin
Längenmesstechnik

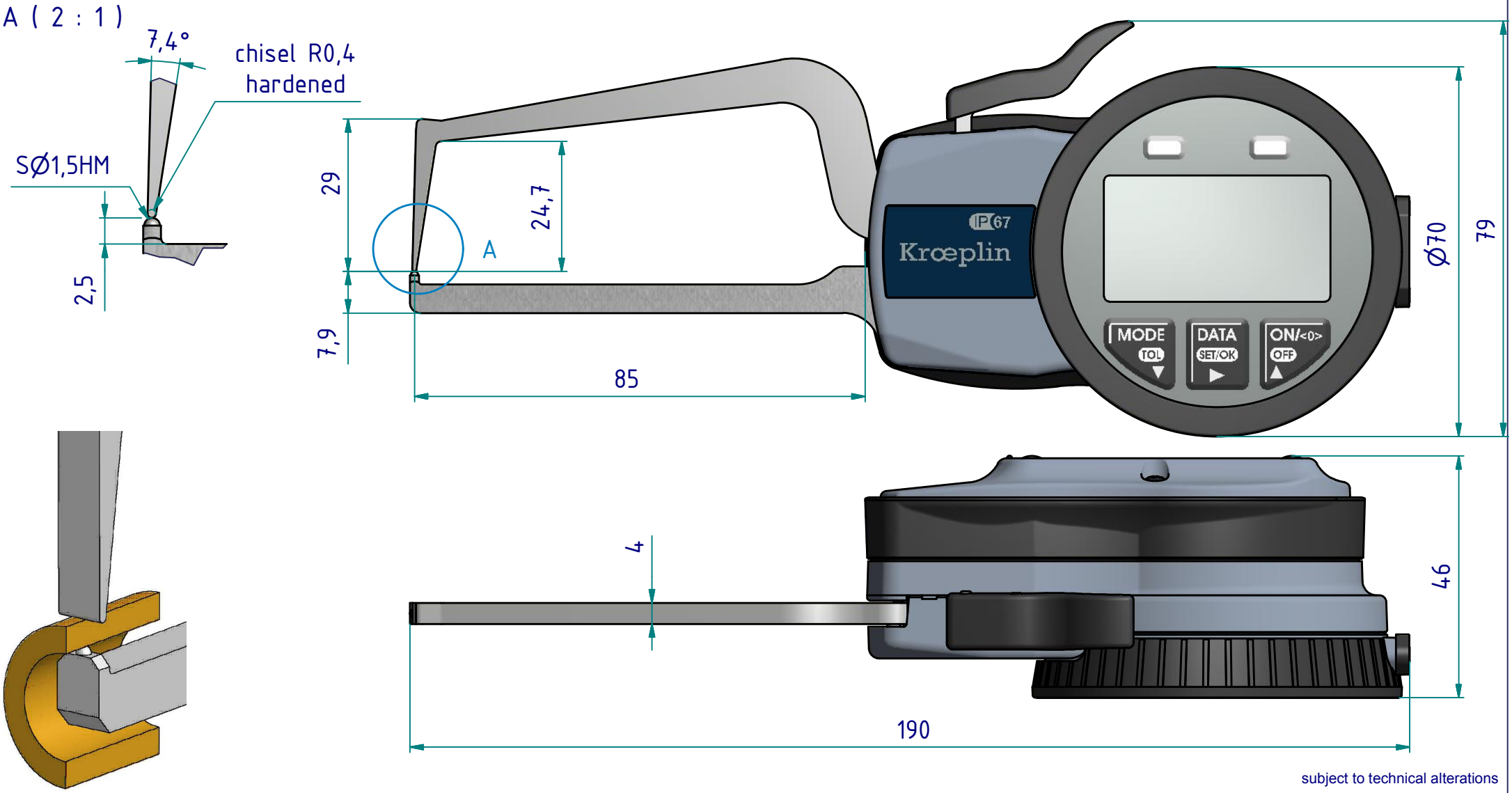

subject to technical alterations

type:	C
range:	0 - 20 mm
range of indication:	0 - 20,5 mm
digital step:	0,01 mm
scale interval:	-
measuring force:	1,1 - 1,6 N
weight:	270 g

acceptable deviations
VDI/VDE/DGQ 2618 Bl. 12.1/13.1)

max. permissible errors "G":	0,03 mm
repeatability "r":	0,01 mm
reference temperature:	20° C
operation temperature:	10° C - 30° C
storage temperature:	-10° C - 50° C

scale:	1:1
drawing-nr.:	DAB-C2R20S_KR_e
date of issue:	07.01.09
name:	M. Balzer
revision status:	
revision date:	

data sheet: C2R20S

Kroeplin GmbH
Gartenstraße 50
D-36381 Schlüchtern

Tel.: 06661 86 0
Fax: 06661 86 39
Mail: sales@kroeplin.com
Web: www.kroeplin.com

Kroeplin
Längenmesstechnik

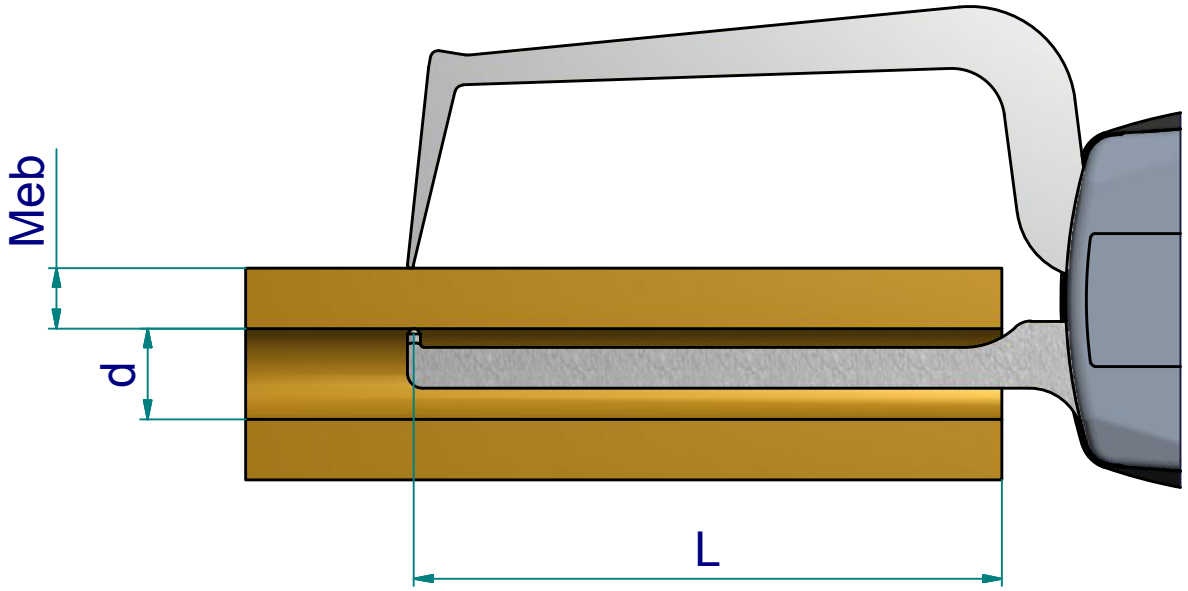

measuring capacity

internal diameter d [mm]	measuring range Meb [mm]									
	0,5	2	4	6	8	10	12	15	18	20
9	40,9	19,4	17,4	18,5	21,1	25,6	33,5	65,7	79,2	78,2
10	82,9	41,2	37,0	39,3	44,8	54,3	70,9	80,3	79,2	78,2
11	84,9	63,1	56,6	60,0	68,5	80,8	80,5	80,3	79,2	78,2
12	85,4	82,7	76,2	80,8	81,3	80,8	80,5	80,3	79,2	78,2
13	85,4	84,6	83,4	82,1	81,3	80,8	80,5	80,3	79,2	78,2
>14	85,4	85,5	83,4	82,1	81,3	80,8	80,5	80,3	79,2	78,2
	L									

L = maximum usable arm length [mm]

Example:
d = 11 Meb = 4 L = 56,6

subject to technical alterations

drawing-nr.: DAB-C2R20S_KR_e
date of issue: 07.01.09
name: M. Balzer

revision status:
revision date:

data sheet: C2R20S

Kroeplin GmbH
Gartenstraße 50
D-36381 Schlüchtern

Tel.: 06661 86 0
Fax: 06661 86 39
Mail: sales@kroeplin.com
Web: www.kroeplin.com

Kroeplin
Längenmesstechnik

interface as accessories available:

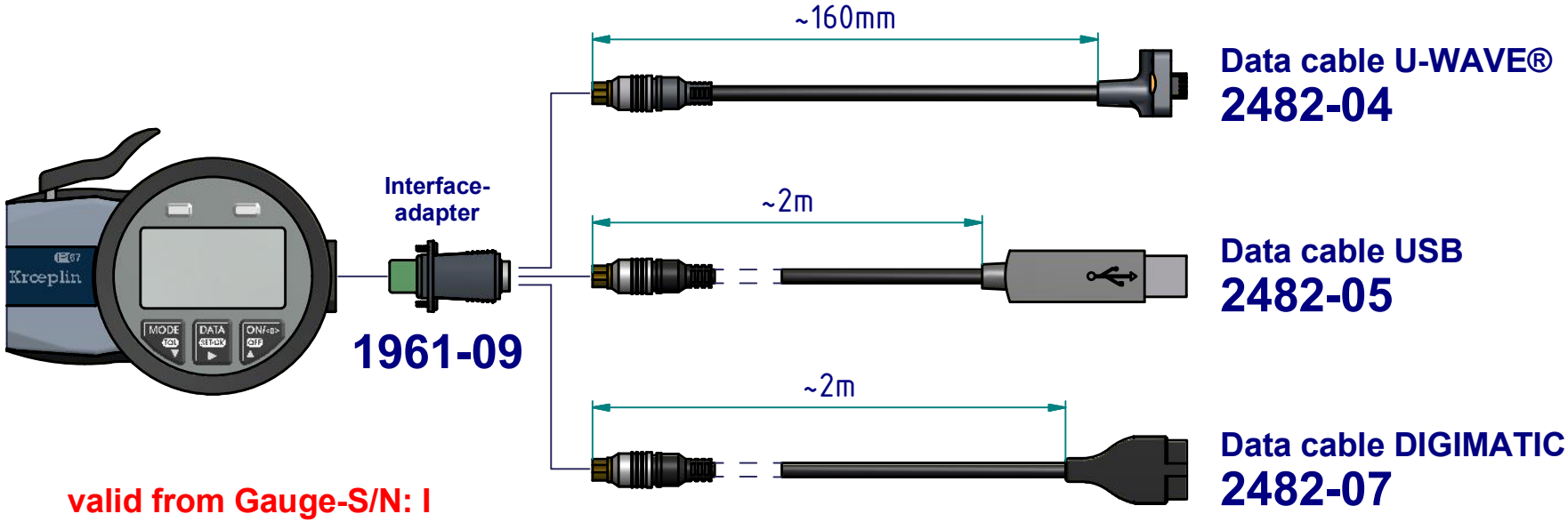

Data cable U-WAVE®
2482-04

Data cable USB
2482-05

Data cable DIGIMATIC
2482-07

valid from Gauge-S/N: I
Always specify serial number
when ordering Interfaces or accessories!

subject to technical alterations

drawing-nr.:	DAB-C2R20S_KR_e
date of issue:	07.01.09
name:	M. Balzer
revision status:	2043
revision date:	24.02.12