data sheet: G330

Kroeplin GmbH
Gartenstraße 50
D-36381 Schlüchtern

Tel.: 06661 86 0
Fax: 06661 86 39
Mail: sales@kroeplin.com
Web: www.kroeplin.com

Kroeplin
Längenmesstechnik

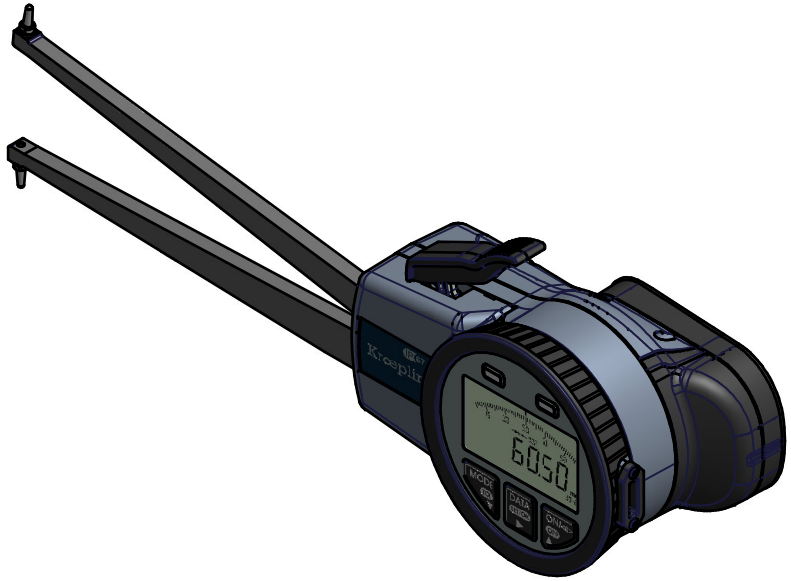

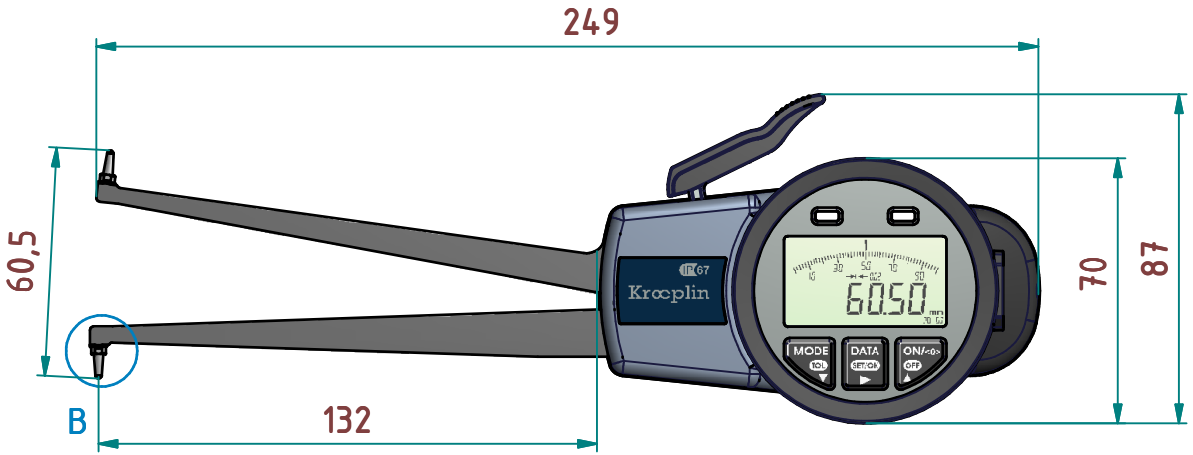

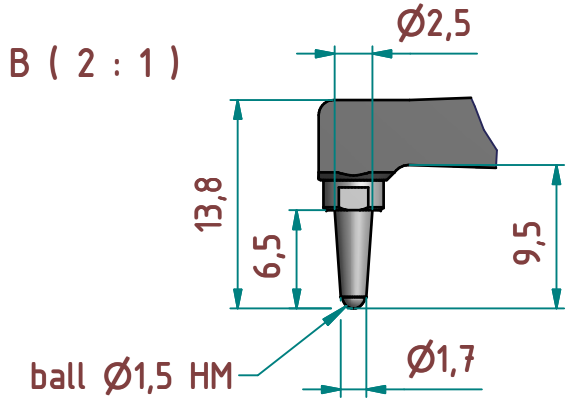

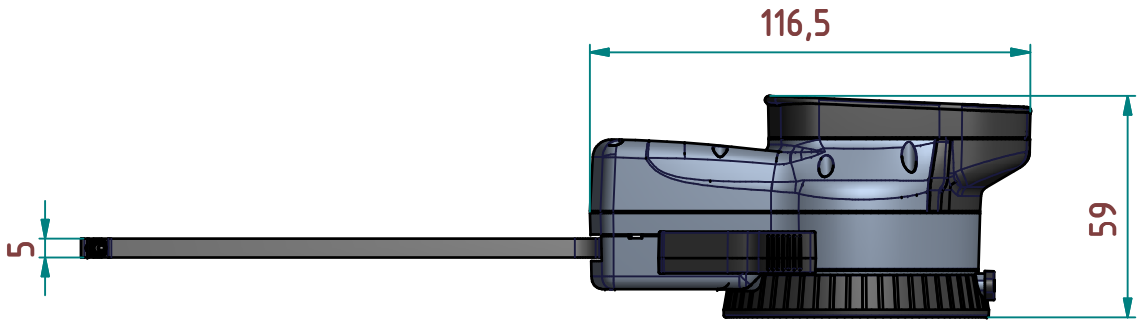

subject to technical alterations

type:	E200
range:	30 - 60 mm
range of indication:	29,5 - 60,5 mm
digital step:	0,02 mm
scale interval:	
measuring force:	1,2 - 1,7 N
weight:	370 g

acceptable deviations
VDI/VDE/DGQ 2618 Bl. 12.1/13.1)

max. permissible errors "G":	0,04 mm
repeatability "r":	0,02 mm
reference temperature:	20° C
operation temperature:	10° C - 30° C
storage temperature:	-10° C - 50° C

scale:	1 : 2
drawing-nr.:	DAB-G330_KR_en
date of issue:	10.04.2013
name:	Lange
revision status:	
revision date:	

data sheet: G330

Kroeplin GmbH
Gartenstraße 50
D-36381 Schlüchtern

Tel.: 06661 86 0
Fax: 06661 86 39
Mail: sales@kroeplin.com
Web: www.kroeplin.com

Kroeplin
Längenmesstechnik

interface as accessories available:

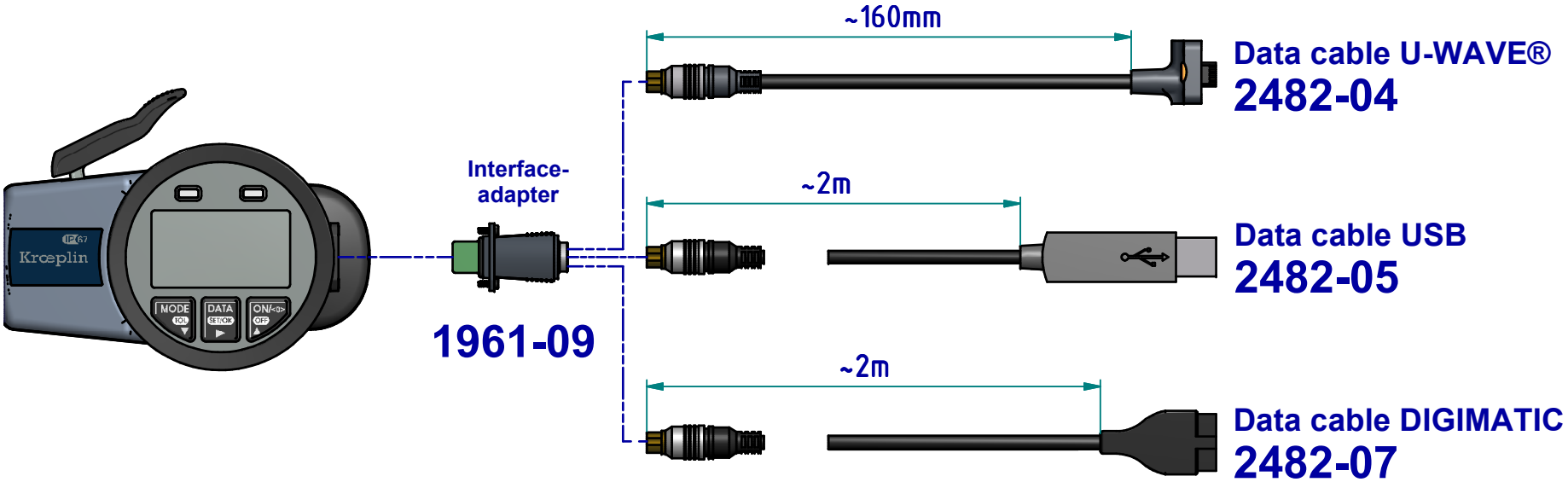

subject to technical alterations

drawing-nr.:	DAB-G330_KR_en
date of issue:	10.04.2013
name:	Lange
revision status:	
revision date:	

data sheet: G330

Kroeplin GmbH
Gartenstraße 50
D-36381 Schlüchtern

Tel.: 06661 86 0
Fax: 06661 86 39
Mail: sales@kroeplin.com
Web: www.kroeplin.com

Kroeplin
Längenmesstechnik

measuring capacity

groove depth A [mm]	measuring range Meb [mm]												
	30	**32**	**34**	**36**	**38**	**40**	**42**	**45**	**48**	**51**	**54**	**57**	**60**
0	0 / 130	0 / 131	0 / 132	0 / 132	0 / 132	0 / 132	0 / 132	0 / 132	0 / 132	0 / 132	0 / 132	0 / 132	0 / 132
1		2,0 / 131	2,0 / 131	2,0 / 132	2,0 / 132	2,0 / 132	2,0 / 132	2,0 / 132	2,0 / 132	2,0 / 132	2,0 / 132	2,0 / 132	2,0 / 132
2			2,2 / 131	2,2 / 132	2,2 / 132	2,2 / 132	2,2 / 132	2,2 / 132	2,2 / 132	2,2 / 132	2,2 / 132	2,2 / 132	2,2 / 132
3				2,4 / 131	2,4 / 132	2,4 / 132	2,4 / 132	2,4 / 132	2,3 / 132	2,3 / 132	2,3 / 132	2,3 / 132	2,3 / 132
4					2,6 / 131	2,6 / 132	2,5 / 132	2,5 / 132	2,5 / 132	2,5 / 132	2,4 / 132	2,5 / 132	2,5 / 132
5						2,7 / 132	2,7 / 132	2,7 / 132	2,6 / 132	2,6 / 132	2,6 / 132	2,6 / 132	2,6 / 132
	B / L												

B = minimum groove width [mm]
L = maximum usable arm length [mm]

Example:
Meb = 36 B = 2,2
A = 2 L = 132

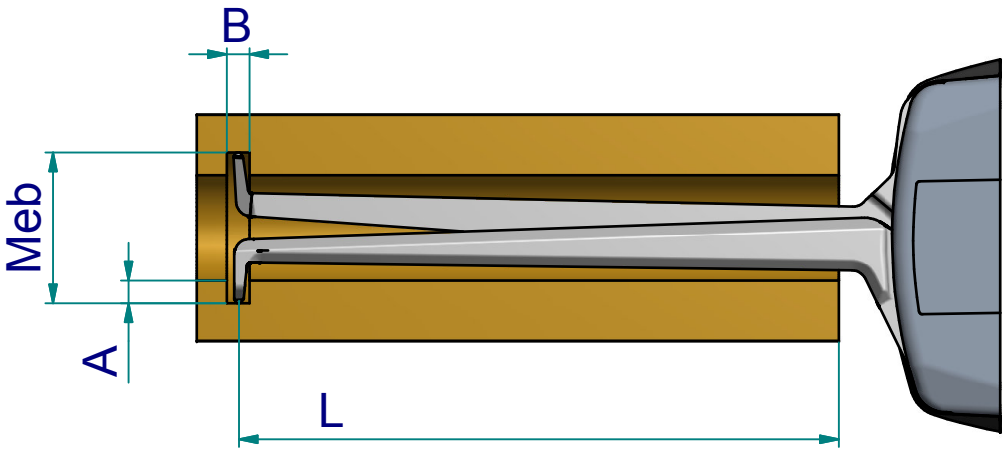

subject to technical alterations

drawing-nr.:	DAB-G330_KR_en
date of issue:	03.07.2013
name:	Lange
revision status:	
revision date:	